CP3 & CP15 2000

SINCE 1894 - THE ORIGINAL -

TM SINCE 1894 MADE IN EUROPE

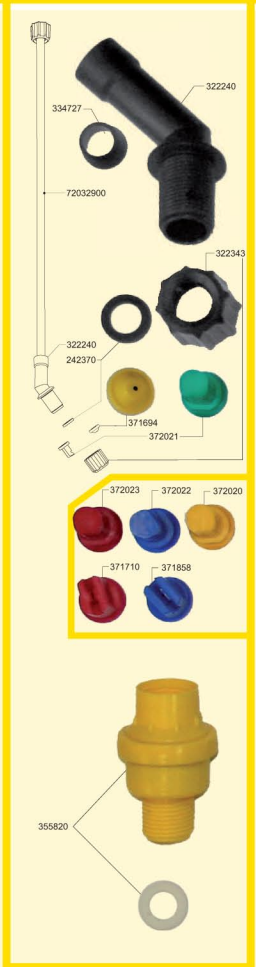

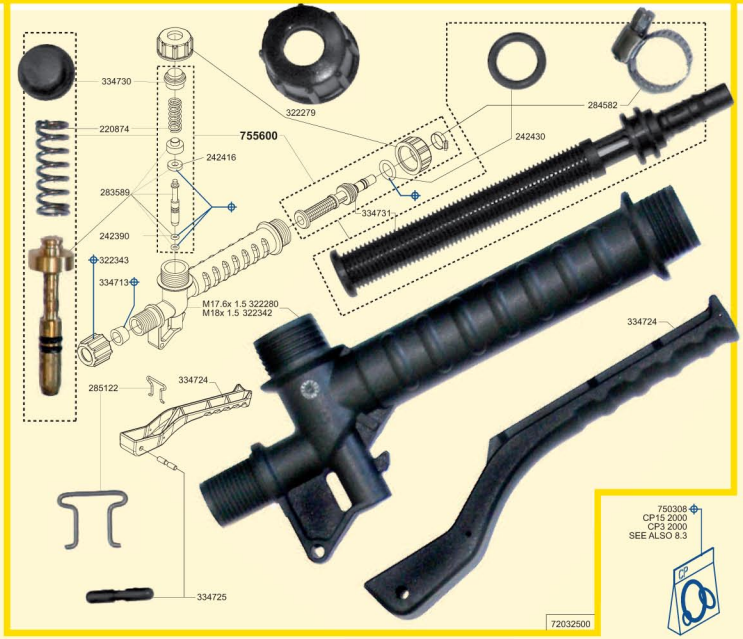

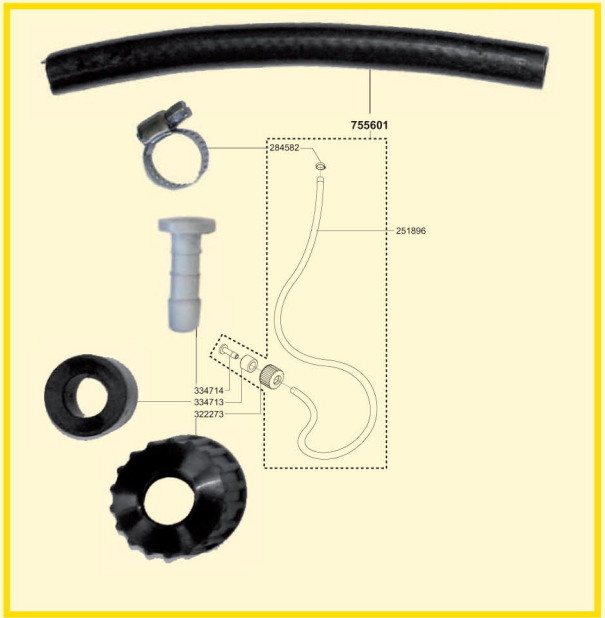

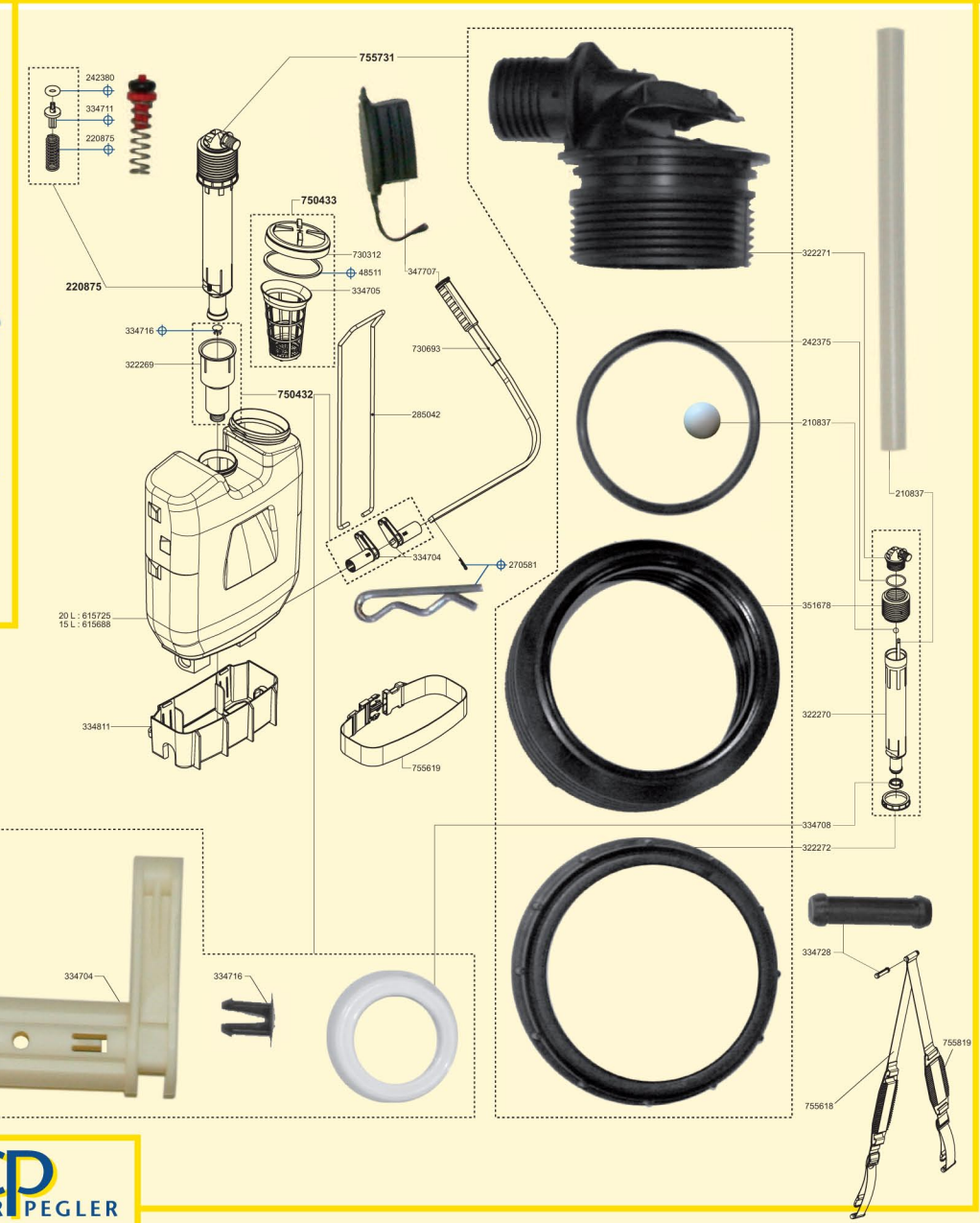

COOPER PEGLER

SPRAYING TECHNOLOGY

www.cooper-pegler.com

EXEL GSA - B.P. 424 - 69653 Villefranche-sur-Saône Cedex FRANCE - e-mail : exelgsa@exelgsa.com

Tél. +33 (0)4 74 62 48 48 - SAV : Tél. +33 (0)4 74 62 48 17 - Fax +33 (0)4 74 62 37 51

ref : 863496